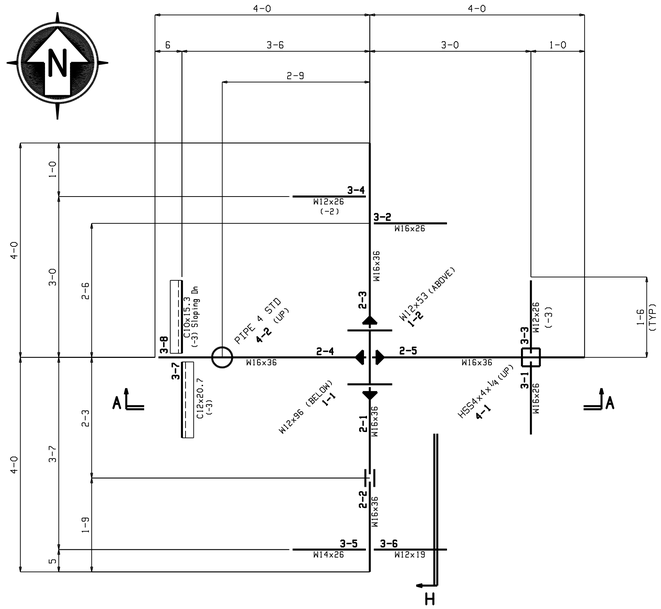

Plan @ TOS EL 3-10
Elevation: 3-10 (U.N.)

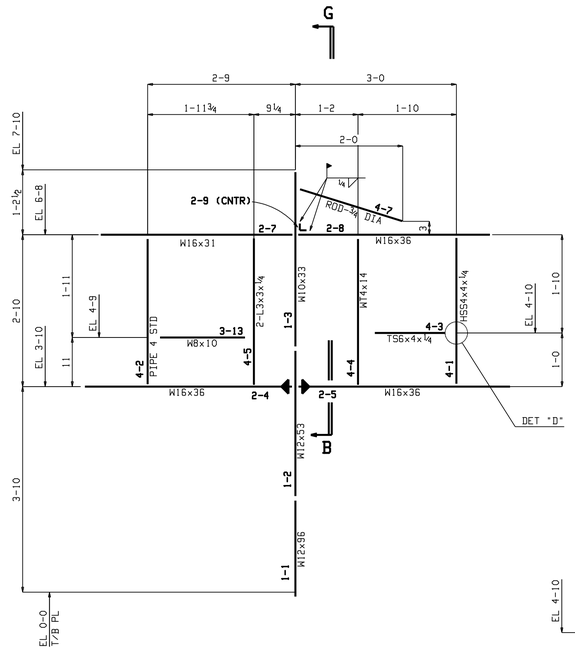

SECTION A-A

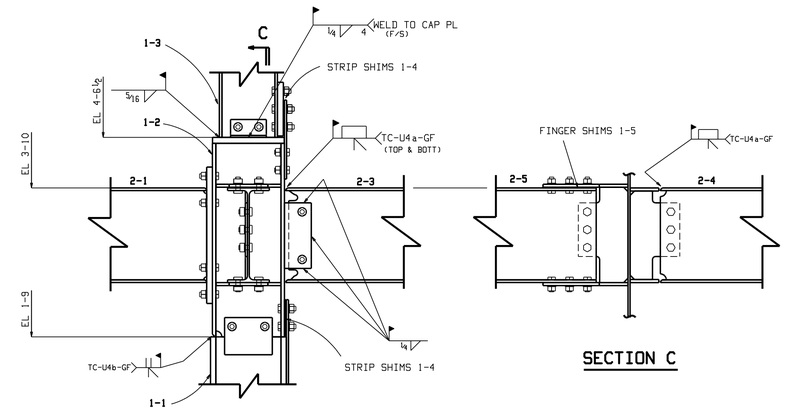

SECTION B

SECTION C

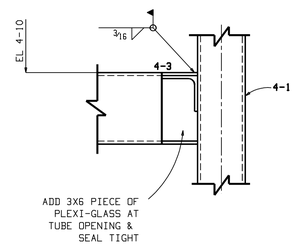

DETAIL D

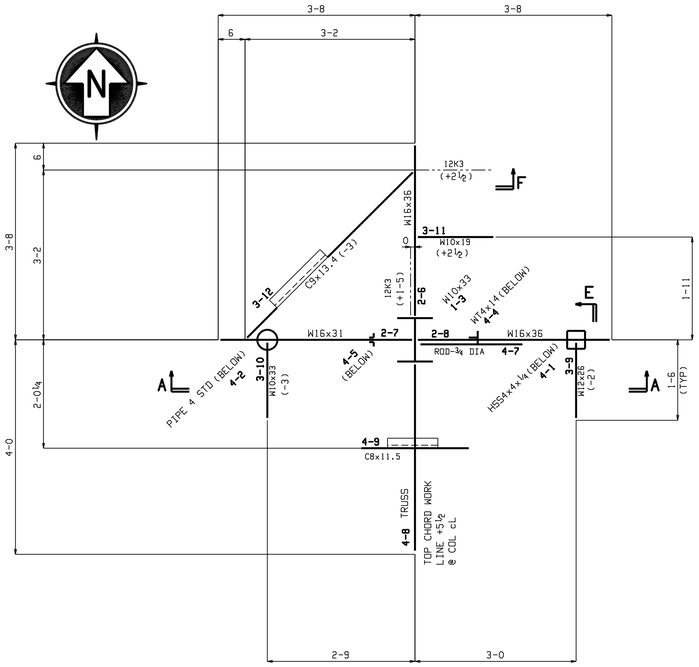

PLAN @ TOS EL 6-8
Elevation: 6-8 (U.N.)

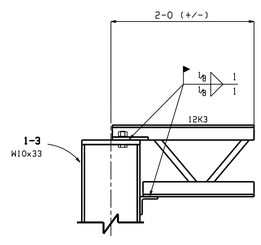

SECTION G

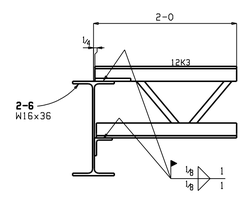

SECTION F

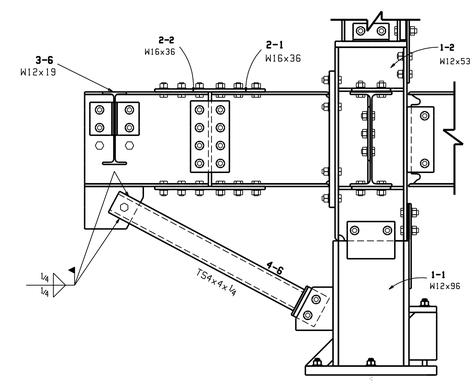

SECTION H

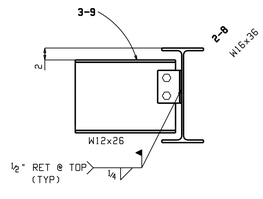

SECTION E

AMERICAN INSTITUTE OF STEEL CONSTRUCTION

ERECTION DWG. NO		
SENT FOR APPROVAL		
DATE	BY	REMARKS

SHOPE NOTE: PAINT PIECE MARK ON LEFT END AS DETAILED

SHOPE NOTE: ALL RE-ENTRANT CORNERS SHALL BE SHAPED NOTCH FREE TO A RADIUS AT LEAST½"

"USE NO. 70XX WELD ROD"
ALL COMPLETE JOINT PENETRATION BUTT WELDS L.H. 7018 (L.H. LOW HYDROGEN)

NO	REVISION
B	
A	

OPEN HOLES: 15/16 (U.N.)
NO PAINT WITHIN 3" OF OPEN HOLES
PAINT

DWG DATE	BB 12-03
CKD DATE	JS 01-04
CODE	

DETAILS
STRUCTURAL STEEL TEACHING SCULPTURE

CONTR. NO. SDS100 | DWG. NO P-1