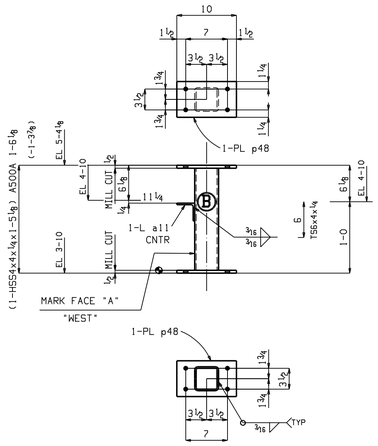


ONE COLUMN 4-1

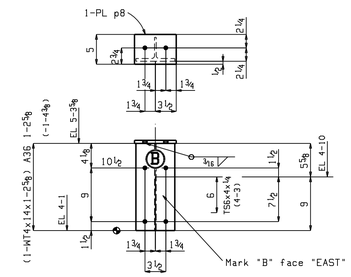


ONE COLUMN 4-4

SHOP NOTE:
TOE DIRECTION FAR SIDE

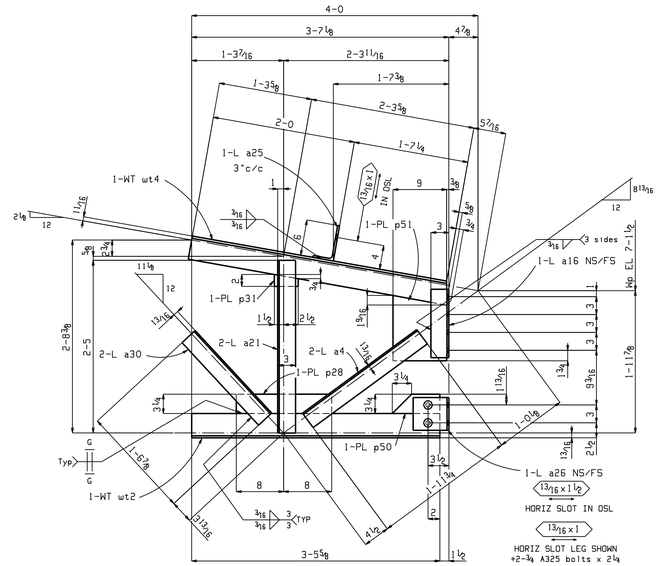


ONE BEAM 4-8

SHOP BOLTS:
2-¾x2¼ A325N w/2HD WASH

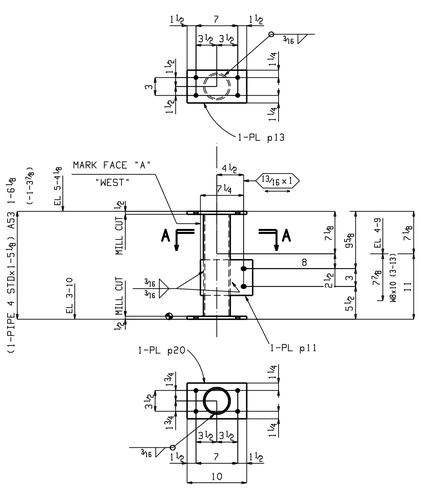


ONE COLUMN 4-2

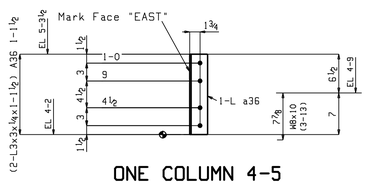


ONE COLUMN 4-5

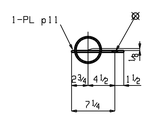


Section A-A
4-2

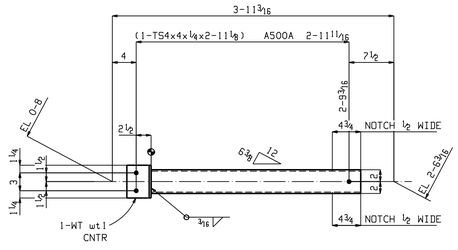


ONE VERTICAL BRACE 4-6

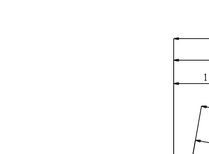


ONE PURLIN 4-9

SHOP NOTE:
TOE DIRECTION NEAR SIDE

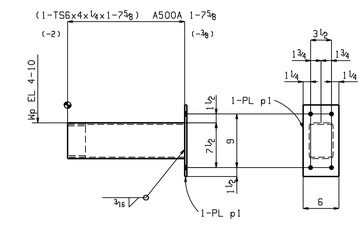


ONE BEAM 4-3

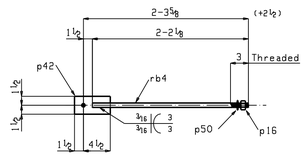


ONE VERTICAL BRACE 4-7

## BILL OF MATERIAL

| LINE | Piece Mark | Quan Unit | Quan Total | Description | Length | | Height Unit | Height Total | Remarks |
|---|---|---|---|---|---|---|---|---|---|
| 1 | 4-1 | | ONE | COLUMN | | | 35 | 35 | |
| 2 | ts2 | 1 | 1 | HSS4x4x¼ | 1 | 5⅛ | 17 | 17 | M2E A500A |
| 3 | a11 | 1 | 1 | L3x3x¼ | 0 | 2 | 1 | 1 | A36 |
| 4 | p48 | 2 | 2 | PL½x6 | 0 | 10 | 9 | 17 | A36 |
| 5 | | | | | | | | | |
| 6 | | | | | | | | | |
| 7 | | | | | | | | | |
| 8 | 4-2 | | ONE | COLUMN | | | 36 | 36 | |
| 9 | pp1 | 1 | 1 | PIPE 4 STD | 1 | 5⅛ | 15 | 15 | M2E A53 |
| 10 | p20 | 1 | 1 | PL½x6 | 0 | 10 | 9 | 9 | A36 |
| 11 | p13 | 1 | 1 | PL½x5½ | 0 | 10 | 8 | 8 | A36 |
| 12 | p11 | 1 | 1 | PL5/16x6 | 0 | 8¾ | 5 | 5 | A36 |
| 13 | | | | | | | | | |
| 14 | | | | | | | | | |
| 15 | | | | | | | | | |
| 16 | 4-3 | | ONE | BEAM | | | 33 | 33 | |
| 17 | ts3 | 1 | 1 | TS6x4x¼ | 1 | 7⅝ | 26 | 26 | A500A |
| 18 | p1 | 1 | 1 | PL⅜x6 | 1 | 0 | 8 | 8 | A36 |
| 19 | | | | | | | | | |
| 20 | | | | | | | | | |
| 21 | | | | | | | | | |
| 22 | 4-4 | | ONE | COLUMN | | | 22 | 22 | |
| 23 | wt6 | 1 | 1 | WT4x14 | 1 | 2⅝ | 17 | 17 | A36 |
| 24 | p8 | 1 | 1 | PL½x5 | 0 | 7 | 5 | 5 | A36 |
| 25 | | | | | | | | | |
| 26 | | | | | | | | | |
| 27 | | | | | | | | | |
| 28 | 4-5 | | ONE | COLUMN | | | 11 | 11 | |
| 29 | a36 | 2 | 2 | L3x3x¼ | 1 | 1½ | 6 | 11 | A36 |
| 30 | | | | | | | | | |
| 31 | | | | | | | | | |
| 32 | | | | | | | | | |
| 33 | 4-6 | | ONE | VERTICAL BRACE | | | 40 | 40 | |
| 34 | ts5 | 1 | 1 | TS4x4x¼ | 2 | 11⅛ | 36 | 36 | A500A |
| 35 | wt1 | 1 | 1 | WT4x9 | 0 | 5½ | 4 | 4 | A36 |
| 36 | | | | | | | | | |
| 37 | | | | | | | | | |
| 38 | | | | | | | | | |
| 39 | 4-9 | | ONE | PURLIN | | | 23 | 23 | |
| 40 | c4 | 1 | 1 | C8x11.5 | 2 | 0 | 23 | 23 | A36 |
| 41 | | | | | | | | | |
| 42 | | | | | | | | | |
| 43 | | | | | | | | | |
| 44 | 4-7 | | ONE | VERTICAL BRACE | | | 6 | 6 | |
| 45 | p16 | 1 | 1 | HEX. NUT¾ | 0 | 1½ | 0 | 0 | A36 |
| 46 | p42 | 1 | 1 | PL⅜x3 | 0 | 6 | 2 | 2 | A36 |
| 47 | p50 | 1 | 1 | STD WASH-¾ | 0 | 1 | 0 | 0 | A36 |
| 48 | rb4 | 1 | 1 | RB¾ | 2 | 2⅛ | 3 | 3 | A36 |
| 49 | | | | | | | | | |
| 50 | | | | | | | | | |
| 51 | | | | | | | | | |
| 52 | 4-8 | | ONE | BEAM | | | 167 | 167 | |
| 53 | wt4 | 1 | 1 | WT4x12 | 3 | 8 | 44 | 44 | BIE A36 |
| 54 | wt2 | 1 | 1 | WT4x9 | 3 | 5⅝ | 31 | 31 | A36 |
| 55 | a26 | 2 | 2 | L6x4x5/16 | 0 | 5½ | 5 | 9 | A36 |
| 56 | a25 | 1 | 1 | L6x3½x5/16 | 0 | 6 | 5 | 5 | A36 |
| 57 | a16 | 1 | 1 | L4x3x5/16 | 0 | 11½ | 7 | 7 | A36 |
| 58 | a4 | 2 | 2 | L3x3x¼ | 1 | 11¾ | 10 | 20 | A36 |
| 59 | a30 | 2 | 2 | L3x3x¼ | 1 | 6⅞ | 8 | 16 | A36 |
| 60 | a21 | 2 | 2 | L3x2x¼ | 2 | 5 | 10 | 20 | BIE A36 |
| 61 | p51 | 1 | 1 | PL¼x9 | 0 | 11 | 7 | 7 | A36 |
| 62 | p28 | 1 | 1 | PL¼x3¼ | 1 | 4 | 4 | 4 | A36 |
| 63 | p50 | 1 | 1 | PL¼x3¼ | 0 | 8 | 2 | 2 | A36 |
| 64 | p31 | 1 | 1 | PL¼x2 | 0 | 4 | 1 | 1 | A36 |
| 65 | | 2 | 2 | ¾ Dia A325N | 0 | 2¼ | 1 | 1 | 2HD WASH |
| 66 | | | | | | | | | |
| 67 | | | | | | | | | |
| 68 | | | | | | | | | |
| 69 | | | | | | | | | |
| 70 | | | | | | | | | |
| 71 | | | | | | | | | |
| 72 | | | | | | | | | |
| 73 | | | | | | | | | |
| 74 | | | | | | | | | |

AMERICAN INSTITUTE OF STEEL CONSTRUCTION

| | | | |
|---|---|---|---|
| ERECTION DWG. NO | SHOPE NOTE: PAINT PIECE MARK ON LEFT END AS DETAILED | B | |
| SENT FOR APPROVAL | SHOPE NOTE: ALL RE-ENTRANT CORNERS SHALL BE SHAPED NOTCH FREE TO A RADIUS AT LEAST 1/6" | A | |
| DATE BY REMARKS | "USE NO. 70XX WELD ROD" ALL COMPLETE JOINT PENETRATION BUTT WELDS L.H. 7018 (L.H. LOW HYDROGEN) | NO | REVISION |
| | | | OPEN HOLES: 13/16 (U.N.) NO PAINT WITHIN 3" OF OPEN HOLES PAINT |

DWG DATE: BB 12-03
CKD DATE: JS 01-04
CODE

# DETAILS
## STRUCTURAL STEEL TEACHING SCULPTURE

CONTR. NO. SDS100 | DWG. NO D4