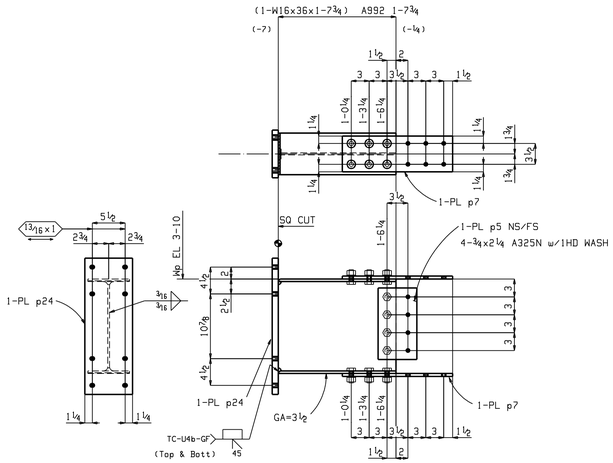

ONE BEAM 2-1

SHOP BOLTS (Unless Noted):
12-¾x2 A325SC w/1HD WASH

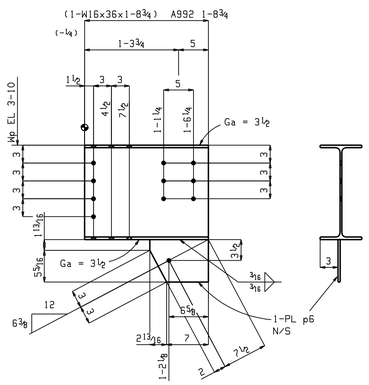

ONE BEAM 2-2

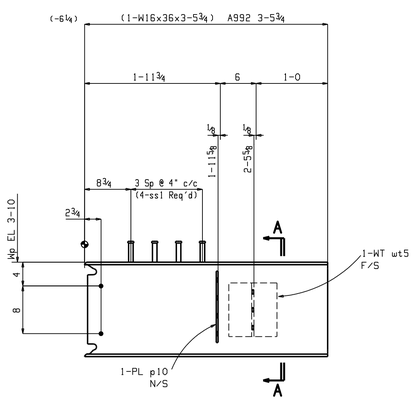

ONE BEAM 2-3

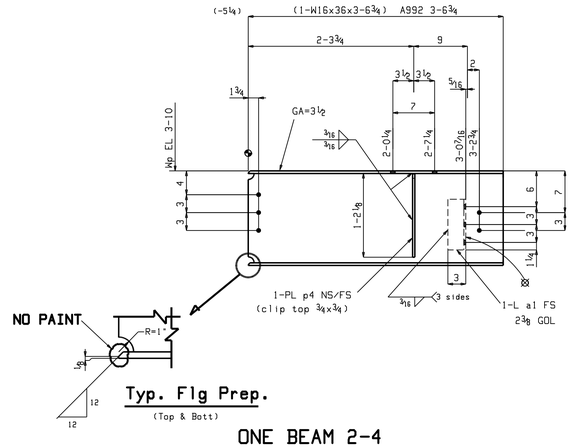

ONE BEAM 2-4

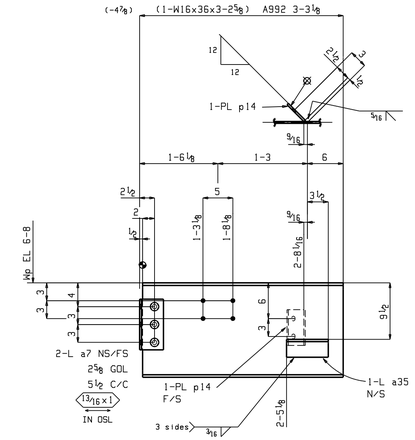

ONE BEAM 2-6

SHOP BOLTS:
3-¾x2 A325N w/1HD WASH

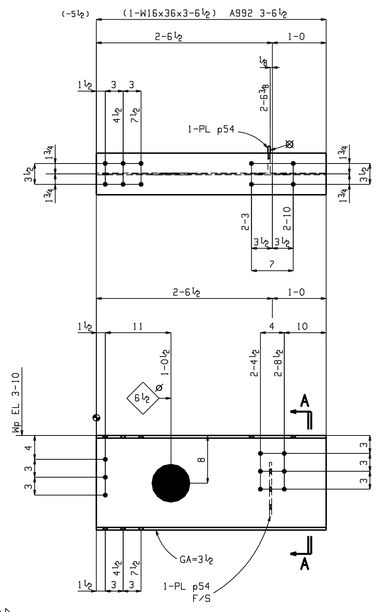

ONE BEAM 2-5

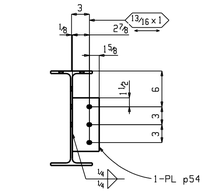

Section A-A
2-5

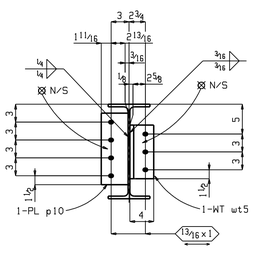

Section A-A
2-3

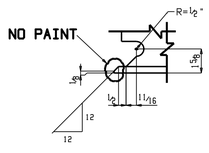

Typ. Flg Prep.
(Top & Bott)

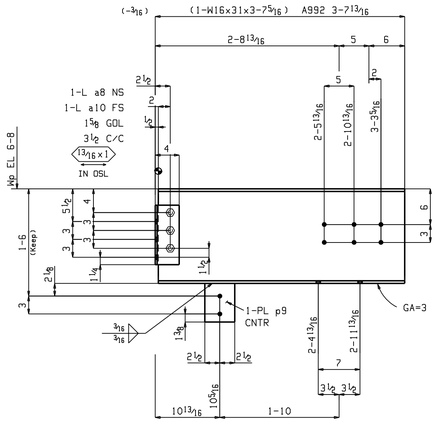

ONE BEAM 2-7

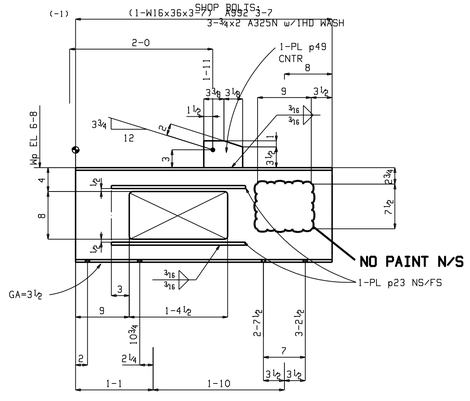

ONE BEAM 2-8

BILL OF MATERIAL

LINE	Piece Mark	Quan Unit	Quan Total	Description	Length		Height Unit	Height Total	Remarks
1	2-1		ONE	BEAM			170	170	
2	w5	1	1	W16x36	1	7¾	59	59	SIE A992
3	p24	1	1	PL1x8	1	10⅞	52	52	A36
4	p7	2	2	PL½x6	1	6½	16	31	A36
5	p5	2	2	PL⅜x6½	1	0	8	17	A36
6		4	4	¾ Dia A325N	0	2¼	1	3	1HD WASH
7		12	12	¾ Dia A325SC	0	2	1	8	1HD WASH
8									
9									
10									
11	2-2		ONE	BEAM			70	70	
12	w21	1	1	W16x36	1	8¾	62	62	A992
13	p6	1	1	PL⅜x7⅛	0	9 13/16	7	7	A36
14									
15									
16									
17	2-3		ONE	BEAM			151	151	
18	w19	1	1	W16x36	3	5¾	125	125	A992
19	wt5	1	1	WT6x25	0	9	19	19	A36
20	p10	1	1	PL5/16x4½	1	0	5	5	A36
21	ss1	4	4	H5¾	0	3½	0	2	
22									
23									
24									
25	2-4		ONE	BEAM			143	143	
26	w11	1	1	W16x36	3	6¾	128	128	A992
27	a1	1	1	L4x3x5/16	0	8½	5	5	A36
28	p4	2	2	PL⅜x3¼	1	2	5	10	A36
29									
30									
31									
32	2-5		ONE	BEAM			132	132	
33	w22	1	1	W16x36	3	6½	128	128	A992
34	p54	1	1	PL⅜x4½	0	9	4	4	A36
35									
36									
37									
38	2-6		ONE	BEAM			136	136	
39	w7	1	1	W16x36	3	2⅝	116	116	A992
40	a7	2	2	L4x4x5/16	0	8½	6	12	A36
41	a35	1	1	L3x3x⅜	0	7	4	4	A36
42	p14	1	1	PL5/16x4	0	6	2	2	A36
43		3	3	¾ Dia A325N	0	2	1	2	1HD WASH
44									
45									
46									
47	2-7		ONE	BEAM			129	129	
48	w20	1	1	W16x31	3	7 9/16	112	112	A992
49	a8	1	1	L4x3x5/16	0	10	6	6	A36
50	a10	1	1	L4x3x5/16	0	10	6	6	A36
51	p9	1	1	PL5/16x5	0	6½	3	3	A36
52		3	3	¾ Dia A325N	0	2	1	2	1HD WASH
53									
54									
55									
56	2-8		ONE	BEAM			170	170	
57	w14	1	1	W16x36	3	7	129	129	A992
58	p23	4	4	PL½x3	1	10½	10	38	A36
59	p49	1	1	PL⅜x4½	0	6½	3	3	A36
60									
61									
62									
63	2-9		ONE	Loose Angle			4	4	
64	a27	1	1	L3x3x⅜	0	6	4	4	A36
65									
66									
67									
68									
69									
70									
71									
72									
73									
74									

ERECTION DWG. NO	
SENT FOR APPROVAL	
DATE BY	REMARKS

SHOPE NOTE: PAINT PIECE MARK ON LEFT END AS DETAILED

SHOPE NOTE: ALL RE-ENTRANT CORNERS SHALL BE SHAPED NOTCH FREE TO A RADIUS AT LEAST ½"

"USE NO. 70XX WELD ROD"
ALL COMPLETE JOINT PENETRATION BUTT WELDS L.H. 7018 (L.H. LOW HYDROGEN)

NO	REVISION
B	
A	

OPEN HOLES: 15/16 (U.N.)
NO PAINT WITHIN 3" OF OPEN HOLES
PAINT

DWG DATE	BB 12-03
CKD DATE	JS 01-04
CODE	

AMERICAN INSTITUTE OF STEEL CONSTRUCTION

DETAILS

STRUCTURAL STEEL TEACHING SCULPTURE

CONTR. NO. SDS100 | DWG. NO D2