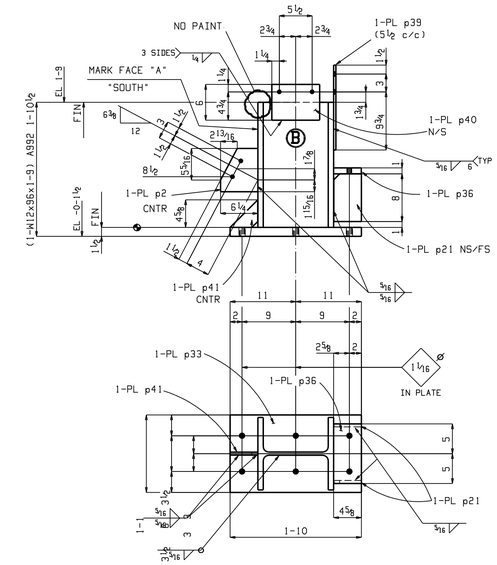

ONE COLUMN 1-1

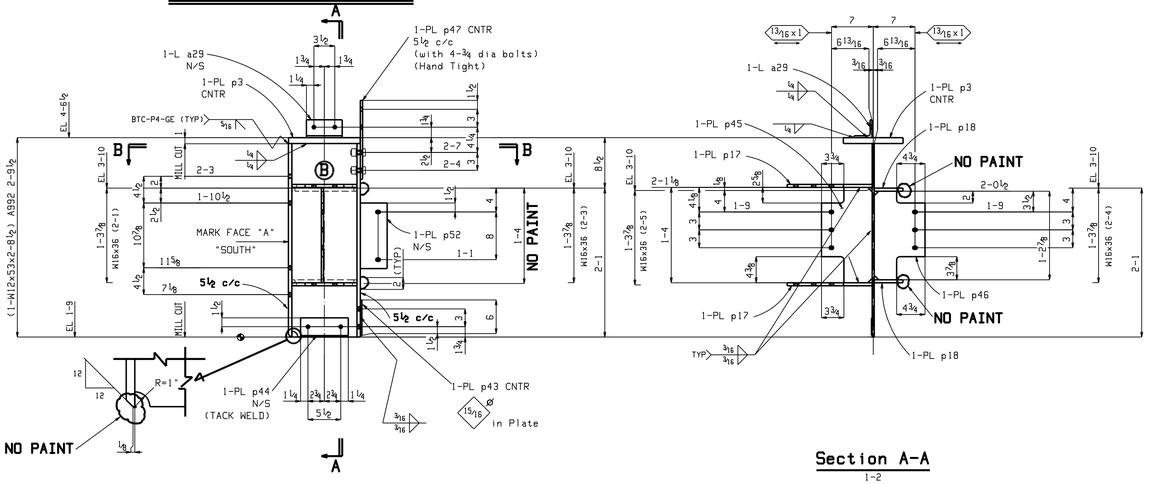

Section A-A
1-2

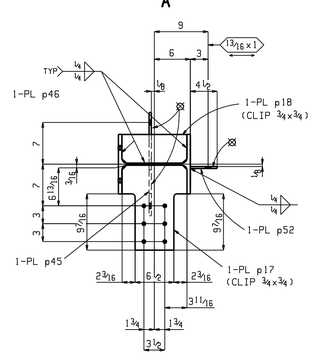

Section B-B
1-2

ONE COLUMN 1-2

SHOP BOLTS:
4-¾x2 A325N w/1HD WASH

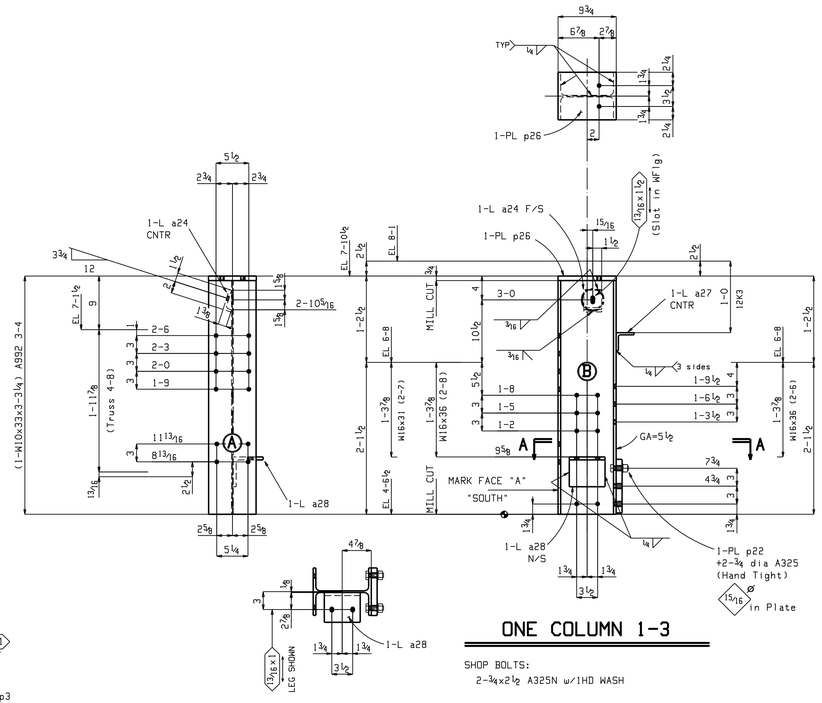

Section A-A
1-3

ONE COLUMN 1-3

SHOP BOLTS:
2-¾x2½ A325N w/1HD WASH

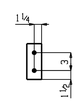

4 Shims 1-4

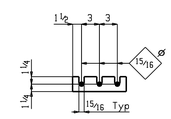

2 Finger Shims 1-5

BILL OF MATERIAL

LINE	Piece Mark	Quan Unit	Quan Total	Description	Length		Height Unit	Height Total	Remarks
1	1-1		ONE	COLUMN			338	338	
2	w1	1	1	W12x96	1	9	168	168	M2E A992
3	p33	1	1	PL1½x13	1	10	122	122	A36
4	p36	1	1	PL1x4⅝	0	10	13	13	A36
5	p21	2	2	PL½x4⅝	0	8	5	10	A36
6	p41	1	1	PL½x4⅝	0	4⅝	3	3	A36
7	p39	1	1	PL⅜x8	1	2¼	12	12	A36
8	p2	1	1	PL⅜x6¼	0	7¼	5	5	A36
9	p40	1	1	PL⅜x6	0	8	5	5	A36
10									
11									
12									
13									
14									
15	1-2		ONE	COLUMN			290	290	
16	w24	1	1	W12x53	2	8½	144	144	M2E A992
17	a29	1	1	L3x3x5/16	0	6	3	3	M2E A36
18	p3	1	1	PL1x10	1	0	34	34	A36
19	p17	2	2	PL½x10⅞	1	2¼	22	44	A36
20	p18	2	2	PL½x4 13/16	0	10⅞	7	15	A36
21	p45	1	1	PL⅜x8½	1	4	14	14	A36
22	p46	1	1	PL⅜x8½	1	2⅞	13	13	A36
23	p47	1	1	PL⅜x8	1	1¼	11	11	A36
24	p52	1	1	PL3/16x4½	0	11	4	4	A36
25	p43	1	1	PL¼x6	0	8	3	3	A36
26	p44	1	1	PL⅛x3	0	8	1	1	A36
27		4	4	¾ Dia A325N	0	2	1	3	1HD WASH
28									
29									
30									
31									
32									
33	1-3		ONE	COLUMN			161	161	
34	w12	1	1	W10x33	3	3¼	108	108	M2E A992
35	a28	1	1	L5x5x½	0	6	8	8	A36
36	a24	1	1	L3½x3x⅜	0	3	2	2	Cut 3" Leg A36
37	a27	1	1	L3x3x⅜	0	6	4	4	A36
38	p22	1	1	PL1x8	0	9	20	20	A36
39	p26	1	1	PL¾x8	0	9¾	17	17	A36
40		2	2	¾ Dia A325N	0	2½	1	2	1HD WASH
41									
42									
43									
44									
45									
46	1-4		4	Shim			1	2	
47	p53	1	4	PL⅛x2½	0	6	1	2	A36
48									
49									
50									
51									
52									
53	1-5		2	Finger Shim			1	2	
54	p56	1	2	PL⅛x2½	0	9	1	2	A36
55									
56									
57									
58									
59									
60									
61									
62									
63									
64									
65									
66									
67									
68									
69									
70									
71									
72									
73									
74									

AMERICAN INSTITUTE OF STEEL CONSTRUCTION

ERECTION DWG. NO		
SENT FOR APPROVAL		
DATE	BY	REMARKS

SHOPE NOTE: PAINT PIECE MARK ON LEFT END AS DETAILED

SHOPE NOTE: ALL RE-ENTRANT CORNERS SHALL BE SHAPED NOTCH FREE TO A RADIUS AT LEAST½"

"USE NO. 70XX WELD ROD"
ALL COMPLETE JOINT PENETRATION BUTT WELDS L.H. 7018 (L.H. LOW HYDROGEN)

NO	REVISION
B	
A	

OPEN HOLES: 13/16 (U.N.)
NO PAINT WITHIN 3" OF OPEN HOLES
PAINT

DWG DATE	BB 12-03
CKD DATE	JS 01-04
CODE	

DETAILS
STRUCTURAL STEEL TEACHING SCULPTURE

CONTR. NO. SDS100 | DWG. NO D1